Hillmar
Hillmar Industries Ltd.
7371 Vantage Way
Delta, BC V4G 1C9
P:604 946-7115 F:604 946-0329
info@hillmar.com www.hillmar.com

COUPLING PKM
PKM-145-MSH-LSH-0450-30-1800
SPECIFICATION SHEET
SLS & MKTG
ENGLISH

Sheet Number:	
Job Number:	
Form Number:	429-610-46830PT

Company / Project Reference:	Date.:	Page.:	Document Package No.:	Rev.:
		1 OF 1		

Inventor Drawing

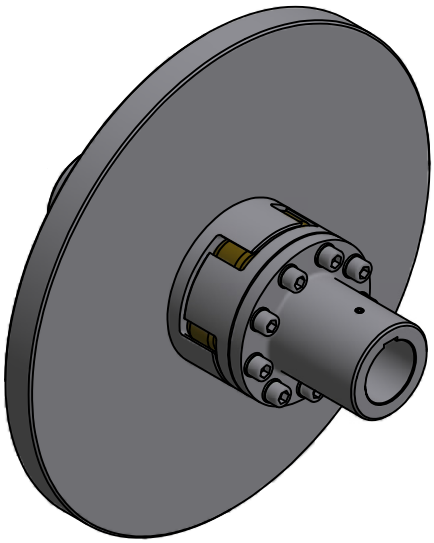

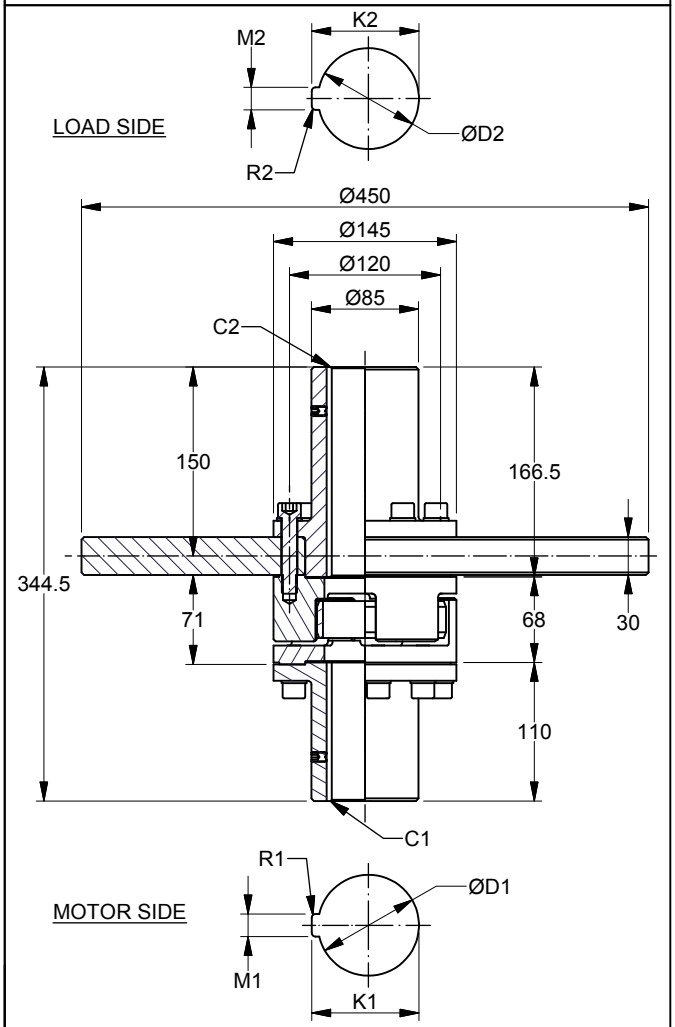

FEATURE	CODE
Polyerethane coupling	PKM
Coupling size (Hub OD)	145
Motor side	MSH
Load side	LSH
Disc diameter (mm)	0450
Disc thickness (mm)	30
Maximum coupling torque (Nm)	1800

Example for ordering	PKM-145-MSH-LSH-0450-30-1800

TECHNICAL DATA

Disc model	SDBD-0450-30-145
Disc diameter (mm)	450
Hub bore size MIN. (mm)	40
D1 MAX. (mm)	60
D2 MAX. (mm)	60
Moment of inertia (kgm^2)	0.9781
Mounting bolts	9 x M12
Bolt tightening torque (Nm)	84
MAX. coupling torque TkMAX (Nm)	1800
NOM. coupling torque TkN (Nm)	900
MAX. coupling speed (RPM)	3450
Weight (kg)	55

CUSTOMER SPECIFICATIONS

Motor side	Load side
D1:_____mm	D2:_____mm
M1:_____mm	M2:_____mm
K1:_____mm	K2:_____mm
R1:_____mm	R2:_____mm
C1:_____mm	C2:_____mm

NOTES

Coupling balancing grade ISO 1940-G6.3 is guaranteed for all coupling parts.

All figures are nominal figures only

All dimensions are in millimeters

Document Template #710-101-62058

** ALL TECHNICAL DATA IS SUBJECT TO CHANGE WITHOUT NOTICE **
Hillmar works have a fully registered ISO 9001-2008 quality assurance programme (QCB #01-1525)

C:\TEMP\a3f49bb3-e10c-4cd0-aed8-26c1c4c1b337\80000528080\HILLMAR\HILLMAR PRODUCTION\04 THRUSTER DB\0700-4\07004005 PKM-GKM-RKSM-RKX\SPC-SHT-PKM-GKM-RKSM-RKX\01 PKM\46830 PKM-145-MSH-LSH-0450-30-1800.idw